MARINA DRIVE SLIDE REPAIR
CR 266 AT M.P. 0.63
MENDOCINO COUNTY, CALIFORNIA

GENERAL NOTES

1. ALL MATERIAL WORKMANSHIP AND CONSTRUCTION SHALL CONFORM TO THE COUNTY OF MENDOCINO STANDARD SPECIFICATIONS AND STANDARD PLANS AND THE STATE OF CALIFORNIA STANDARD PLANS AND SPECIFICATIONS, LATEST EDITION.
2. FOR WORK IN OR AFFECTING THE COUNTY ROAD RIGHT-OF-WAY, THE CONTRACTOR SHALL OBTAIN AN ENCROACHMENT PERMIT FROM THE COUNTY OF MENDOCINO (340 LAKE MENDOCINO DRIVE, UKIAH, CA 95482) BEFORE START OF WORK. CONTRACTOR SHALL COMPLY WITH ALL REQUIREMENTS OF THE PERMIT. FOR WORK IN OR AFFECTING THE STATE HIGHWAY RIGHT-OF-WAY, A CALTRANS ENCROACHMENT PERMIT IS REQUIRED.
3. CONTRACTOR SHALL OBTAIN REQUIRED PERMITS FROM ALL AGENCIES AND PAY ALL AGENCY FEES PRIOR TO COMMENCEMENT OF ANY WORK. CONTRACTOR SHALL CONFORM WITH ZONING CODE, BUILDING CODE, AND ALL OTHER REQUIREMENTS ADMINISTERED BY THE COUNTY OF MENDOCINO PLANNING AND BUILDING SERVICES DEPARTMENT.
4. CONTRACTOR SHALL GIVE THE COUNTY OF MENDOCINO DEPARTMENT OF TRANSPORTATION AND KENNEC INC. 72 HOURS NOTICE BEFORE STARTING WORK. CONTRACTOR SHALL ARRANGE A PRE-CONSTRUCTION MEETING WITH COUNTY OF MENDOCINO, KENNEC INC., AND ALL NECESSARY PARTIES.
5. WORK HOURS ARE LIMITED TO MONDAY THROUGH FRIDAY, 7:00 A.M. TO 5:00 P.M. WHEN LANE CLOSURES ARE MADE FOR A DAY ONLY, AT THE END OF EACH WORK DAY, ALL COMPONENTS OF THE TRAFFIC CONTROL SYSTEM, EXCEPT PORTABLE DELINEATORS PLACED ALONG OPEN TRENCHES OR EXCAVATION ADJACENT TO THE TRAVELED WAY, SHALL BE REMOVED FROM THE TRAVELED WAY AND SHOULDER. IF THE CONTRACTOR SO ELECTS, SAID COMPONENTS MAY BE STORED AT SELECTED CENTRAL LOCATIONS AS APPROVED BY THE DOT DIRECTOR, WITHIN THE LIMITS OF THE COUNTY RIGHT OF WAY. INSPECTION WILL BE AVAILABLE MONDAY THROUGH FRIDAY FROM 8:00 A.M. TO 4:30 P.M. CONTRACTORS SHALL SCHEDULE INSPECTIONS 72 HOURS IN ADVANCE BY CALLING (707) 463-4363.
6. ANY DISCREPANCY DISCOVERED BY CONTRACTOR IN THESE PLANS OR ANY FIELD CONDITIONS DISCOVERED BY CONTRACTOR THAT MAY DELAY OR OBSTRUCT THE PROPER COMPLETION OF THE WORK PER THESE PLANS SHALL BE BROUGHT TO THE ATTENTION OF THE COUNTY DOT AND OWNER IMMEDIATELY UPON DISCOVERY. SAID NOTIFICATION SHALL BE IN WRITING.
7. GRADE BREAKS ON CURBS AND SIDEWALKS SHALL BE ROUNDED OFF IN FORMS AND SURFACE FINISHING.
8. ITEMS SPECIFIED ON THE STANDARD PLANS ARE APPROVED FOR USE BY THE COUNTY OF MENDOCINO. ALL SUBSTITUTES OR ALTERATIONS SHALL BE SUBMITTED TO KENNEC INC., AND THE COUNTY OF MENDOCINO FOR APPROVAL.
9. THE CONTRACTOR SHALL MAINTAIN A NEAT APPEARANCE TO THE WORK. IN ANY AREA VISIBLE TO THE PUBLIC, THE FOLLOWING SHALL APPLY:
   WHEN PRACTICEABLE, BROKEN CONCRETE AND DEBRIS DEVELOPED DURING CLEARING AND GRUBBING SHALL BE DISPOSED OF CONCURRENTLY WITH ITS REMOVAL. IF STOCKPILING IS NECESSARY, THE MATERIAL SHALL BE REMOVED OR DISPOSED OF WEEKLY.
   THE CONTRACTOR SHALL FURNISH TRASH BINS FOR ALL DEBRIS FROM STRUCTURE CONSTRUCTION. ALL DEBRIS SHALL BE PLACED IN TRASH BINS DAILY. FORMS OR FALSEWORK THAT ARE TO BE REUSED SHALL BE STACKED NEATLY CONCURRENTLY WITH THEIR REMOVAL. FORMS AND FALSEWORK THAT ARE NOT TO BE REUSED SHALL BE DISPOSED OF CONCURRENTLY WITH THEIR REMOVAL.
10. CONTRACTOR SHALL COMPLY WITH ANY AND ALL MITIGATION MEASURES ADOPTED BY THE COUNTY OF MENDOCINO FOR THE PROJECT.
11. CONTRACTOR SHALL COMPLY WITH THE COUNTY OF MENDOCINO CODE 22.12 REGARDING THE DISCOVERY OF ARCHAEOLOGICAL SITES DURING THE PERFORMANCE OF WORK.

CONTROL POINT TABLE

#	NORTHING	EASTING	ELEV
1	5000.42	4999.78	100.00
2	4900.33	5013.78	70.00
3	4855.19	5013.19	70.00
4	4862.56	5028.14	70.00
5	4899.89	5025.01	70.00

PARTNERSHIP WITH

MENDOCINO COUNTY

JUNE 2007

PREPARED FOR

CALIFORNIA INTEGRATED WASTE MANAGEMENT BOARD

PREPARED BY

KENNEC, INC.
235 EAST BROADWAY
SUITE 311
LONG BEACH, CALIFORNIA 90802
909.657.2160

CONSTRUCTION NOTES

1. PROTECT IN PLACE
2. EXCAVATE TO CONTOURS SHOWN
3. REMOVE AND SALVAGE
4. CONSTRUCT SUBDRAIN SYSTEM (B-B' / - D1)
5. CONSTRUCT RIP RAP PAD (6 / - D2)
6. TDA BACKFILL (B-B' / - D1)
7. CONSTRUCT ROAD SECTION (1 / - D2)
8. CONSTRUCT V-DITCH (4 / - D2)
9. CONSTRUCT SHOTCRETE LINED INLET STRUCTURE
10. INSTALL 30" CMP RISER (5 / - D2)
11. CONSTRUCT 24" CMP CULVERT TRENCH (3 / - D2) (C-C' / - D1)
12. INSTALL 24" CMP CULVERT (C-C' / - D1)
13. INSTALL 24" CMP DOWNDRAIN (C-C' / - D1)
14. CONSTRUCT CMP OUTLET AND RIP RAP PAD (2 / - D2)
15. CONSTRUCT CONCRETE CUT-OFF WALL
16. EXTEND 18" CMP TO OUTLET STRUCTURE

LEGEND

- 90 — EXISTING GRADE CONTOUR
- 90 — PROPOSED GRADE CONTOUR
- CENTER LINE OF ROAD
- EDGE OF PAVEMENT
- LIMITS OF PAVEMENT REMOVAL
- TOE/TOP OF SLOPE (DAYLIGHT LINE)
- PROPOSED EDGE OF PAVEMENT
- PROPOSED CENTERLINE OF ROAD
- FLOWLINE
- SUBDRAIN
- CUT OFF WALL
- RIP RAP
- CONCRETE
- TYPE A DITCH
- 177 / 100.00 / CP — SURVEY POINT
- CP 1 1/2 IP — CONTROL POINT
- PROPERTY MARKER

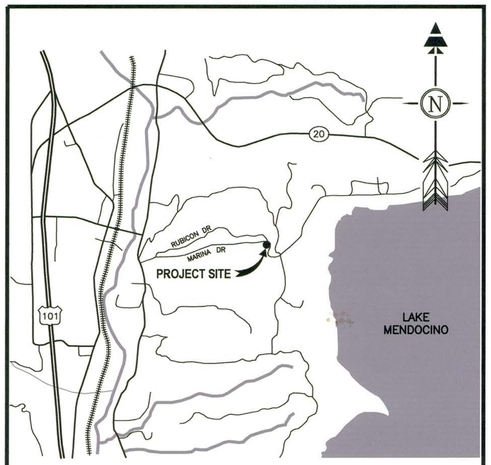

VICINITY MAP

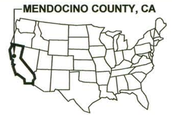

DRAWING NUMBER	TITLE AND DESCRIPTION	LATEST REVISION NUMBER	LATEST REVISION DATE
	COVER SHEET		
C1	EXISTING CONDITIONS		
C2	EXCAVATION PLAN		
C3	FILL PLAN		
D1	SECTIONS		
D2	DETAILS		

APPROVED:

ENGINEER OF RECORD – GARY LIVERMORE, P.E. — DATE 6/14/07

PROJECT MANAGER – JOAQUIN WRIGHT — DATE 6/14/07

PRINCIPAL ENGINEER – JULIAN IBARRA — DATE 6/14/07

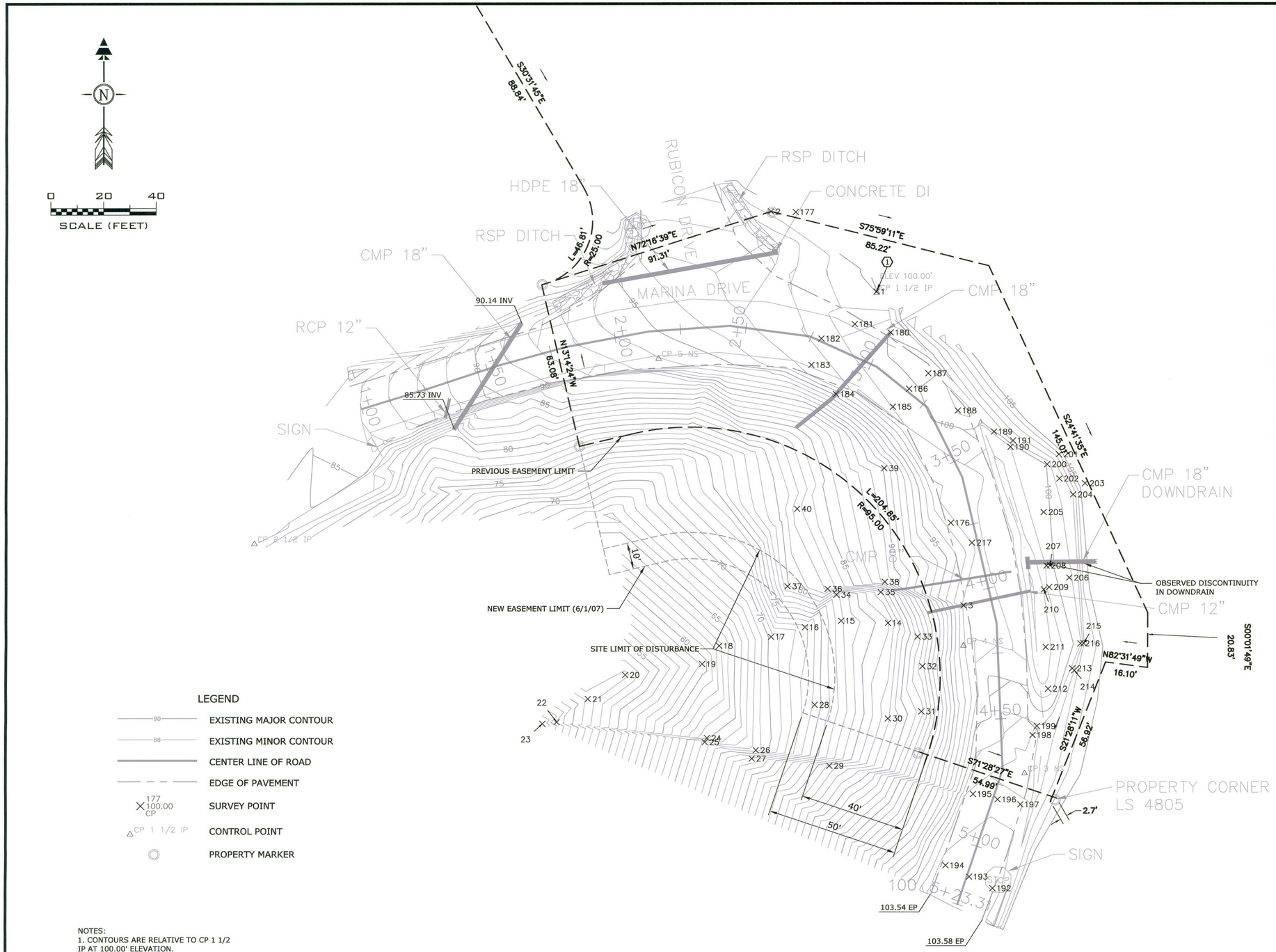

KENNEC SURVEY DATA

PT #	NORTHING	EASTING	ELEVATION	SURVEY DATE
1	5000.4229	4999.7804	100.004	4–20–07
2	5030.9041	4959.6859	99.256	4–20–07
3	4881.2786	5033.0419	98.18	4–20–07
14	4874.5923	5004.3712	80.8	5–3–07
15	4875.4321	4986.5883	77.76	5–3–07
16	4872.9632	4972.8940	72.62	5–3–07
17	4869.3290	4960.0131	70.38	5–3–07
18	4865.9062	4940.3276	62.62	5–3–07
19	4859.0137	4933.8910	59.2	5–3–07
20	4854.8654	4904.6711	51.62	5–3–07
21	4845.7014	4890.5151	51.28	5–3–07
22	4836.9298	4878.7074	48.2	5–3–07
23	4836.2867	4873.2969	45.04	5–3–07
24	4830.8701	4935.7446	64.88	5–3–07
25	4829.3273	4934.9497	67.38	5–3–07
26	4826.2823	4954.3076	68.48	5–3–07
27	4823.1125	4952.7830	72.12	5–3–07
28	4843.4771	4976.6375	74.24	5–3–07
29	4820.3531	4982.2507	81.26	5–3–07
30	4838.2969	5004.4552	82.76	5–3–07
31	4840.9702	5017.1175	86.52	5–3–07
32	4858.1383	5017.4913	88.72	5–3–07
33	4869.4142	5015.6177	86.3	5–3–07
34	4885.3141	4984.8104	77.7	5–3–07
35	4886.2992	5001.5799	82.64	5–3–07
36	4887.5539	4981.4622	82.18	5–3–07
37	4888.5188	4966.2129	79.84	5–3–07
38	4890.2213	5003.1301	88.32	5–3–07
39	4933.3145	5002.8510	90.12	5–3–07
40	4917.8742	4969.8080	82.6	5–3–07
176	4912.5808	5028.1838	98.22	4–20–07
177	5030.6928	4969.0454	101.53	4–20–07
180	4984.8622	5005.1918	98.238	4–20–07
181	4988.0585	4991.5459	99.66	4–20–07
182	4982.5786	4978.9123	98.42	4–20–07
183	4972.5788	4975.1455	97.48	4–20–07
184	4961.5270	4984.4472	95.92	4–20–07
185	4956.7049	5006.1043	97.48	4–20–07
186	4963.5312	5012.2624	100.18	4–20–07
187	4969.4059	5019.5311	100.98	4–20–07
188	4955.2818	5030.7825	101.16	4–20–07
189	4947.2318	5044.4525	100.28	4–20–07
190	4941.4281	5050.7417	98.98	4–20–07
191	4943.8612	5051.7099	101.5	4–20–07
192	4773.8318	5044.2834	103.42	4–20–07
193	4778.2136	5035.3839	103.48	4–20–07
194	4782.5324	5026.4468	103.16	4–20–07
195	4809.6609	5036.8002	102.3	4–20–07
196	4807.6268	5046.1460	102.76	4–20–07
197	4805.7167	5054.7632	102.96	4–20–07
198	4832.0331	5059.3859	102.44	4–20–07
199	4835.4344	5061.0101	100.68	4–20–07
200	4934.8289	5064.6767	100.2	4–20–07
201	4938.6156	5069.1511	103.6	4–20–07
202	4929.3652	5069.3107	107.8	4–20–07
203	4927.5955	5079.0542	106.82	4–20–07
204	4923.3480	5074.5911	102.02	4–20–07
205	4916.6555	5063.4290	99.82	4–20–07
206	4891.8551	5073.1359	100.96	4–20–07
207	4896.5334	5065.8041	101.22	4–20–07
208	4896.4110	5064.5072	99.5	4–20–07
209	4888.2596	5065.5449	99.66	4–20–07
210	4887.3751	5063.4895	98.04	4–20–07
211	4865.4997	5064.2373	97.52	4–20–07
212	4849.6094	5065.1897	98.12	4–20–07
213	4857.3626	5074.3581	101.06	4–20–07
214	4856.6171	5075.1500	102.48	4–20–07
215	4866.9147	5078.6493	102.66	4–20–07
216	4866.8802	5077.4513	100.62	4–20–07
217	4905.0494	5036.2285	98.88	4–20–07

CONTROL POINT TABLE

#	NORTHING	EASTING	ELEV
1	5000.42	4999.78	100.00

LEGEND

- EXISTING MAJOR CONTOUR
- EXISTING MINOR CONTOUR
- CENTER LINE OF ROAD
- EDGE OF PAVEMENT
- SURVEY POINT
- CONTROL POINT
- PROPERTY MARKER

NOTES:
1. CONTOURS ARE RELATIVE TO CP 1 1/2 IP AT 100.00' ELEVATION.
2. CONTOURS PREPARED BY MENDOCINO COUNTY D.O.T. ON 6/21/06.
3. ADDTIONAL SURVEY DATA WAS COLLECTED BY KENNEC INC. ON 4/20/07.

REV	DATE	REVISION DESCRIPTION	DRAWN BY	DESIGNED BY	CHECKED BY	APPROVED BY
–	6/14/07	DATE OF COMPLETION	JPJ	JI	JAW	GL

KENNEC INC.
235 EAST BROADWAY SUITE 311, LONG BEACH, CA 90802

PROJECT CONTACT: JOAQUIN WRIGHT 909.657.2162
PROJECT NUMBER: C004.001.0701.001

KENNEC

THIS DOCUMENT IS THE INTELLECTUAL PROPERTY OF KENNEC, INC. EXCEPT TO THE EXTENT NOT PROTECTED BY COPYRIGHT LAW, ANY USE, DISTRIBUTION, SALE OR MODIFICATION MADE TO THIS DOCUMENT WITHOUT WRITTEN AUTHORIZATION BY KENNEC, INC. WILL RENDER THIS DOCUMENT VOID.

CALIFORNIA INTEGRATED WASTE MANAGEMENT BOARD
MARINA DRIVE AT MILE MARKER 0.63
MENDOCINO COUNTY, CALIFORNIA

MARINA DRIVE SLIDE REPAIR
EXISTING CONDITIONS

REGISTERED PROFESSIONAL ENGINEER
GARY MICHAEL LIVENGOOD
No. 64142
EXP. 12/31/08
CIVIL
STATE OF CALIFORNIA

C1

DRAWING NO.

J:\C004-Dana Humphrey\001-CIWMB\0701.001-Marina Dr\Dwg\C004.001.0701.001.C01.dwg
X-Ref Files: C004.001.0701.001.T07
C004.001.0701.001.XT8
C004.001.0701.001.XB1

REDUCTION SCALE CHECK
SCALE = 1"

Printed: Jun 14, 2007-2:48pm

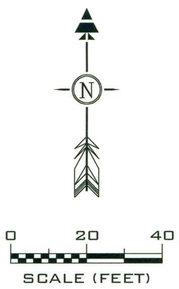

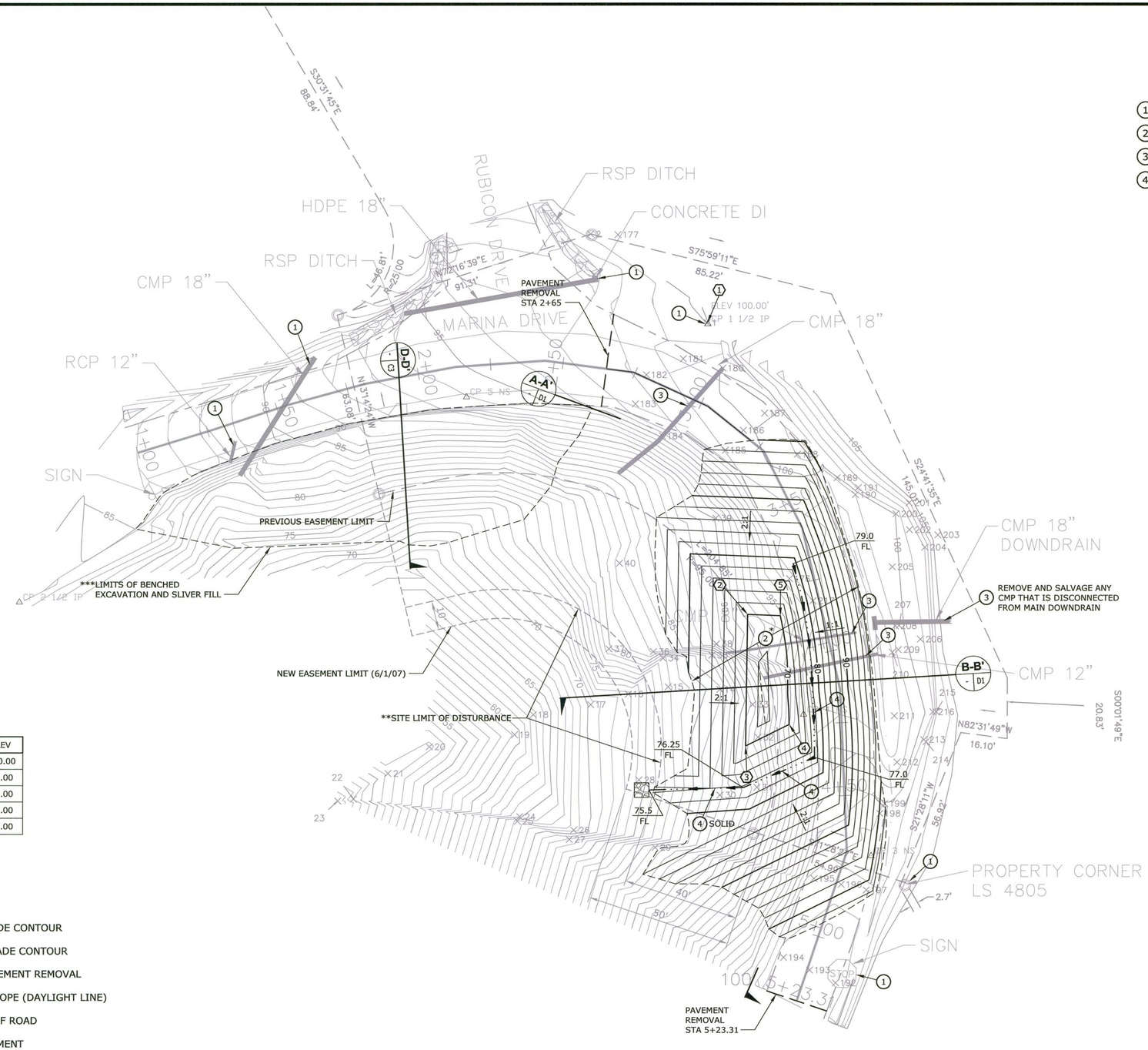

CONTROL POINT TABLE

#	NORTHING	EASTING	ELEV
1	5000.42	4999.78	100.00
2	4900.33	5013.78	70.00
3	4855.19	5013.19	70.00
4	4862.56	5028.14	70.00
5	4899.89	5025.01	70.00

LEGEND

- EXISTING GRADE CONTOUR
- PROPOSED GRADE CONTOUR
- LIMITS OF PAVEMENT REMOVAL
- TOE/TOP OF SLOPE (DAYLIGHT LINE)
- CENTER LINE OF ROAD
- EDGE OF PAVEMENT
- SUBDRAIN
- RIP RAP

CONSTRUCTION NOTES

1. PROTECT IN PLACE
2. EXCAVATE TO CONTOURS SHOWN (B-B' / D1)
3. REMOVE AND SALVAGE
4. CONSTRUCT SUBDRAIN SYSTEM (B-B' / D1)

*NOTE:
EXCAVATED COLLUVIUM I MATERIAL IS TO BE USED AS SOIL BACKFILL AND SLIVER FILL MATERIAL. COLLUVIUM I AND COLLUVIUM II MATERIAL TO BE VERIFIED BY ON-SITE ENGINEER AND/OR REPRESENTATIVE.

**NOTE:
CONTRACTOR WORK AND EQUIPMENT SHALL NOT BE PERFORMED AND/OR UTILIZED OUTSIDE OF EASEMENT LIMIT.

***NOTE:
CONTRACTOR SHALL EXCAVATE SLIVER FILL AREA PER FILL PLAN ON SHEET C3, SECTION D-D'. PRIOR TO WORK COMMENCEMENT CONTRACTOR SHALL VERIFY SITE CONDITIONS AND SLIVER FILL EXCAVATION PLAN WITH ON-SITE ENGINEER AND/OR REPRESENTATIVE.

REV	DATE	REVISION DESCRIPTION	DRAWN BY	DESIGNED BY	CHECKED BY	APPROVED BY
-	6/14/07	DATE OF COMPLETION	JPJ	JI	JAW	GL
-	-	-	-	-	-	-
-	-	-	-	-	-	-
-	-	-	-	-	-	-
-	-	-	-	-	-	-
-	-	-	-	-	-	-

KENNEC INC.
235 EAST BROADWAY SUITE 311, LONG BEACH, CA 90802

PROJECT CONTACT: JOAQUIN WRIGHT 909.857.2162
PROJECT NUMBER: C004.001.0701.001

KENNEC

THIS DOCUMENT IS THE INTELLECTUAL PROPERTY OF KENNEC INC. EXCEPT TO THE EXTENT NOT PROTECTED BY COPYRIGHT LAW, ANY USE, DISTRIBUTION, SALE OR MODIFICATION MADE TO THIS DOCUMENT WITH OUT WRITTEN AUTHORIZATION BY KENNEC, INC. WILL RENDER THIS DOCUMENT VOID.

CALIFORNIA INTEGRATED WASTE MANAGEMENT BOARD
MARINA DRIVE AT MILE MARKER 0.63
MENDOCINO COUNTY, CALIFORNIA

MARINA DRIVE SLIDE REPAIR
EXCAVATION PLAN

REGISTERED PROFESSIONAL ENGINEER
GARY MICHAEL LIVERMORE
No. 64142
EXP. 12/31/08
CIVIL
STATE OF CALIFORNIA

C2

DRAWING NO.

J:\C004-Dana Humphrey\001-CIWMB\0701.001-Marina Dr\Dwg\C004.001.0701.001.C02.dwg
X-Ref Files: C004.001.0701.001.T07
C004.001.0701.001.XE1
C004.001.0701.001.XT8
C004.001.0701.001.XB1

REDUCTION SCALE CHECK
SCALE = 1"

Printed: Jun 14, 2007-2:48pm

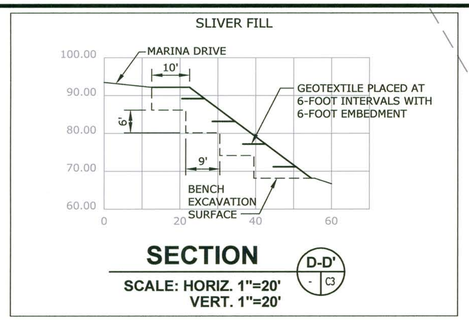

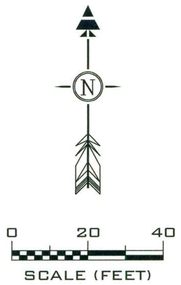

SLIVER FILL NOTE:

NEW EMBANKMENT FILL MATERIAL PLACED AND COMPACTED IN HORIZONTAL LAYERS, USING COLLUVIUM 1 EXCAVATED MATERIAL. GEOGRID MATERIAL SHALL HAVE ULTIMATE TENSILE STRENGTH ≥ 2000 LBS/FT.

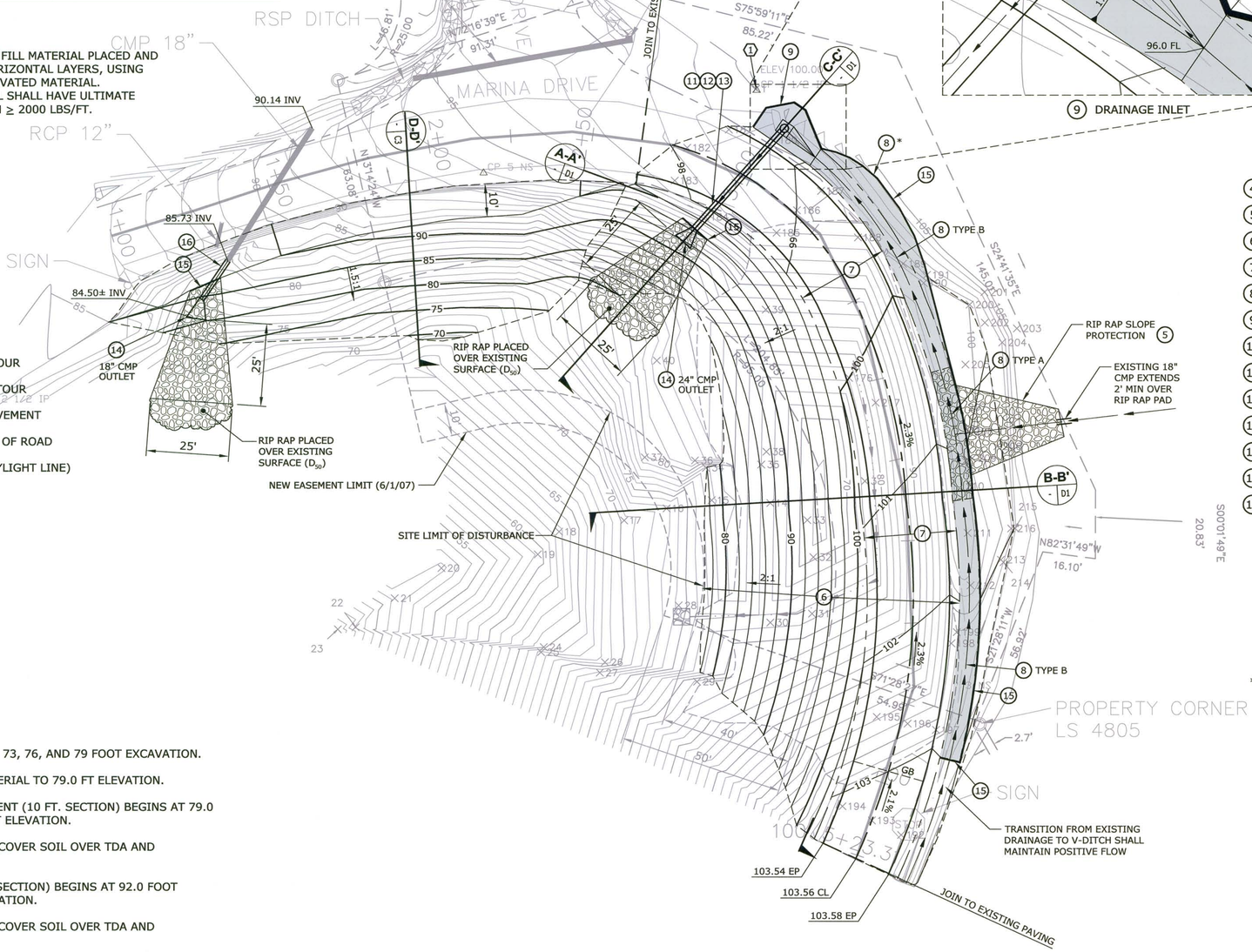

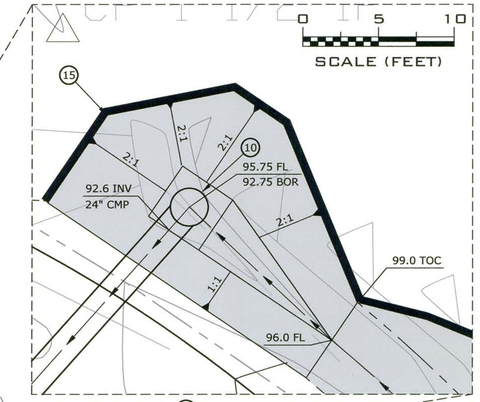

9 DRAINAGE INLET

LEGEND

- EXISTING GRADE CONTOUR
- PROPOSED GRADE CONTOUR
- PROPOSED EDGE OF PAVEMENT
- PROPOSED CENTERLINE OF ROAD
- TOE/TOP OF SLOPE (DAYLIGHT LINE)
- CENTER LINE OF ROAD
- EDGE OF PAVEMENT
- FLOWLINE
- CUT OFF WALL
- RIP RAP
- CONCRETE
- TYPE A DITCH

BACKFILL NOTES:

- GEOGRID MATERIAL TO BE PLACED AT 70, 73, 76, AND 79 FOOT EXCAVATION.
- FILL WITH EXCAVATED COLLUVIUM 1 MATERIAL TO 79.0 FT ELEVATION.
- SUBDRAIN GEOTEXTILE AND TDA PLACEMENT (10 FT. SECTION) BEGINS AT 79.0 FOOT ELEVATION AND ENDS AT 89.0 FOOT ELEVATION.
- PLACE 3.0 FEET OF SPECIFIED LOW PERM COVER SOIL OVER TDA AND GEOTEXTILE.
- GEOTEXTILE AND TDA PLACEMENT (5 FT. SECTION) BEGINS AT 92.0 FOOT ELEVATION AND ENDS AT 97.0 FOOT ELEVATION.
- PLACE 3.0 FEET OF SPECIFIED LOW PERM COVER SOIL OVER TDA AND GEOTEXTILE.
- PLACE NON-WOVEN GEOTEXTILE SEPARATOR OVER COVER SOIL.
- ROAD CONTOURS SHOWN ARE TOP OF AC PAVING.
- ROAD BASE AND AC PAVING CONSTRUCTION TO BE PERFORMED BY MENDOT.

CONSTRUCTION NOTES

4. CONSTRUCT SUBDRAIN SYSTEM (B-B' / D1)
5. CONSTRUCT RIP RAP PAD (6 / D2)
6. TDA BACKFILL (B-B' / D1)
7. CONSTRUCT ROAD SECTION* (1 / D2)
8. CONSTRUCT V-DITCH** (4 / D2)
9. CONSTRUCT SHOTCRETE LINED INLET STRUCTURE
10. INSTALL 30" CMP RISER (5 / D2)
11. CONSTRUCT 24" CMP CULVERT TRENCH (3 / D2) (C-C' / D1)
12. INSTALL 24" CMP CULVERT (C-C' / D1)
13. INSTALL 24" CMP DOWNDRAIN (C-C' / D1)
14. CONSTRUCT CMP OUTLET AND RIP RAP PAD (2 / D2)
15. CONSTRUCT CONCRETE CUT-OFF WALL***
16. EXTEND 18" CMP TO OUTLET STRUCTURE

NOTES:

*ROAD STRIPING AND EDGE OF ROAD REFLECTIVE MARKERS INSTALLATION TO BE PERFORMED BY COUNTY OF MENDOCINO FORCES.

**V-DITCH SHALL EXTEND 1:1 UNTIL IT DAYLIGHTS INTO THE EXISTING SURFACE.

***CUT-OFF WALL IS TO BE CONSTRUCTED ALONG THE ENTIRE LENGTH OF V-DITCH AT THE UPSLOPE EDGE OF LINING.

CONTROL POINT TABLE

#	NORTHING	EASTING	ELEV
1	5000.42	4999.78	100.00

REV	DATE	REVISION DESCRIPTION	DRAWN BY	DESIGNED BY	CHECKED BY	APPROVED BY
-	6/14/07	DATE OF COMPLETION	JPJ	JI	JAW	GL
-	-	-	-	-	-	-
-	-	-	-	-	-	-
-	-	-	-	-	-	-
-	-	-	-	-	-	-

KENNEC INC.
235 EAST BROADWAY SUITE 311, LONG BEACH, CA 90802

PROJECT CONTACT: JOAQUIN WRIGHT 909.857.2165
PROJECT NUMBER: C004.001.0701.001

KENNEC

THIS DOCUMENT IS THE INTELLECTUAL PROPERTY OF KENNEC, INC. EXCEPT TO THE EXTENT NOT PROTECTED BY COPYRIGHT LAW, ANY USE, DISTRIBUTION, SALE OR MODIFICATION MADE TO THIS DOCUMENT WITHOUT WRITTEN AUTHORIZATION BY KENNEC, INC. WILL RENDER THIS DOCUMENT VOID.

CALIFORNIA INTEGRATED WASTE MANAGEMENT BOARD
MARINA DRIVE AT MILE MARKER 0.63
MENDOCINO COUNTY, CALIFORNIA

MARINA DRIVE SLIDE REPAIR
FILL PLAN

REGISTERED PROFESSIONAL ENGINEER
GARY MICHAEL LIVESMORE
No. 64142
EXP. 12/31/08
CIVIL
STATE OF CALIFORNIA

C3

DRAWING NO.

J:\C004-Dana Humphrey\001-CIWMB\0701.001-Marina Dr\Dwg\C004.001.0701.001.003.dwg
X-Ref Files: C004.001.0701.001.TD7
C004.001.0701.001.XE1
C004.001.0701.001.XF1
C004.001.0701.001.XT8

REDUCTION SCALE CHECK
SCALE = 1"

Printed: Jun 14, 2007-2:50pm

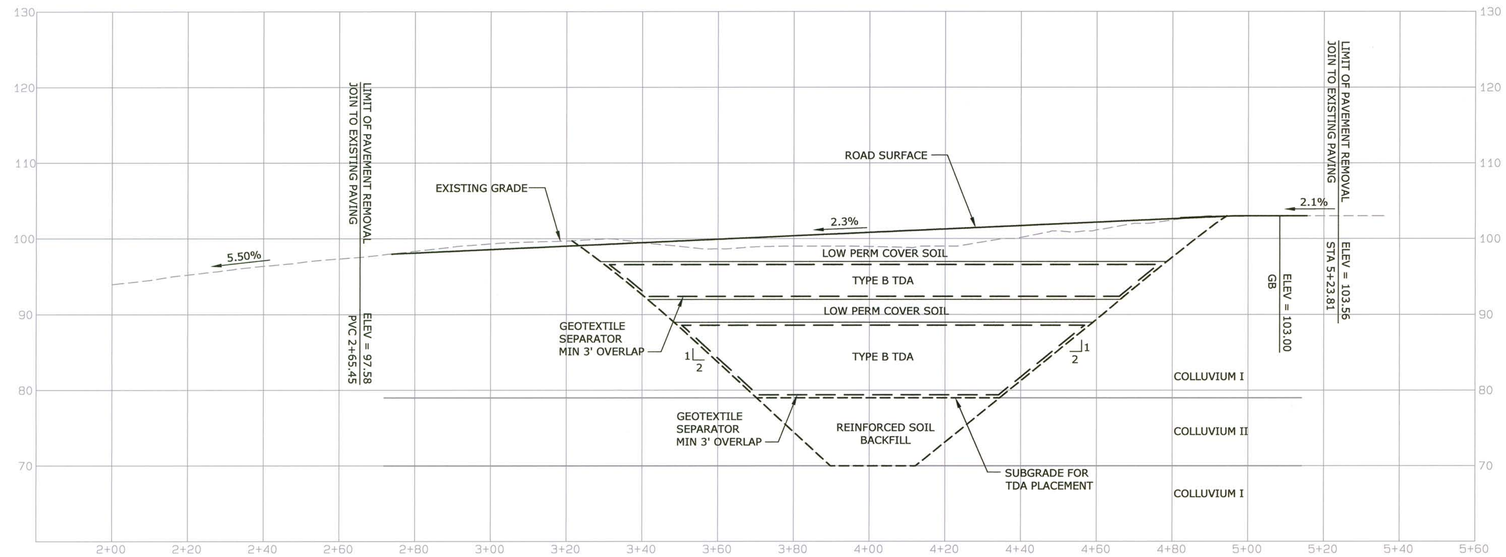

SECTION A-A'

SCALE: HORIZ. 1"=20'
VERT. 1"=10'

NOTE:
SECTION A-A' HAS AN EXAGGERATED VIEW TO SHOW RELATIVE PLACEMENT OF MATERIALS.
REFER TO SHEETS C2 AND C3 FOR ACTUAL EXCAVATION AND FILL LIMITS.

NOTE:
COLLUVIUM MATERIAL BOUNDARIES ARE ESTIMATED FROM GEOTECH REPORT.
ACTUAL LIMITS TO BE VERIFIED BY ONSITE ENGINEER OR OWNER REPRESENTATIVE.

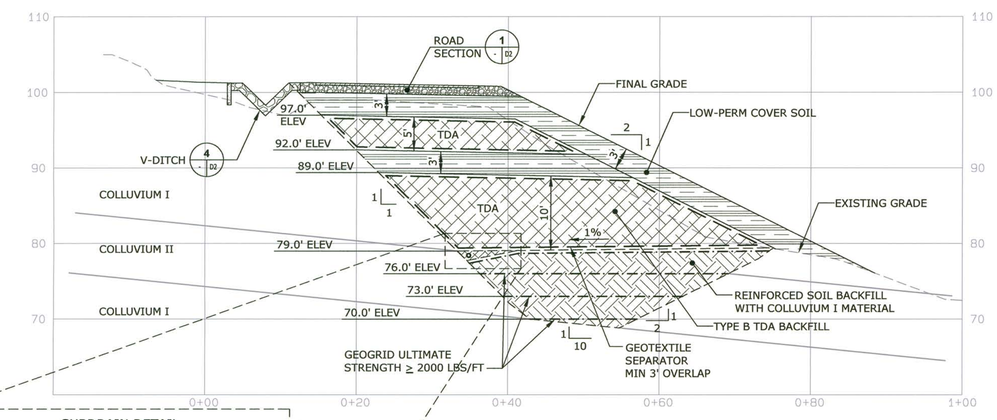

SECTION B-B'

SCALE: HORIZ. 1"=10'
VERT. 1"=10'

NOTE:
COLLUVIUM MATERIAL BOUNDARIES ARE ESTIMATED FROM GEOTECH REPORT.
ACTUAL LIMITS TO BE VERIFIED BY ONSITE ENGINEER OR OWNER REPRESENTATIVE.

SUBDRAIN DETAIL

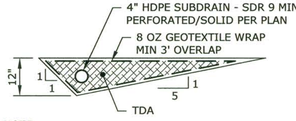

NOTE:
SOLID PIPE BEGINS AT FLOWLINE 76.25
SOLID SUBDRAIN TRENCH BACKFILLED WITH NATIVE SOIL AND DOES NOT USE THE GEOTEXTILE WRAP
SUBDRAIN FLOWLINES AND PLAN VIEW ON SHEET C2

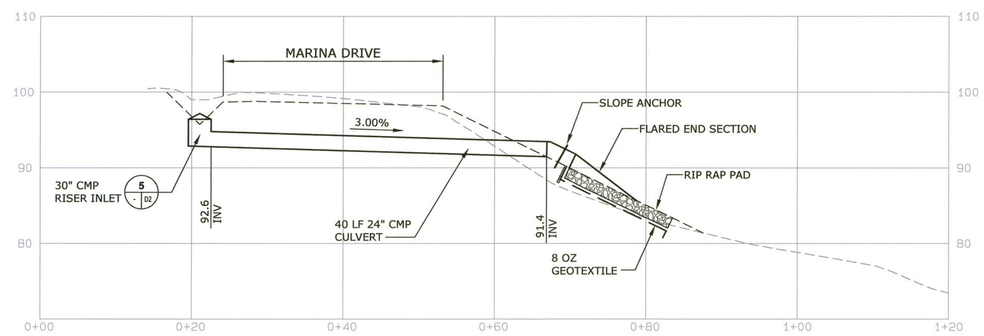

SECTION C-C'

SCALE: HORIZ. 1"=10'
VERT. 1"=10'

REV	DATE	REVISION DESCRIPTION	DRAWN BY	DESIGNED BY	CHECKED BY	APPROVED BY
-	6/14/07	DATE OF COMPLETION	JPJ	JI	JAW	GL
-	-	-	-	-	-	-
-	-	-	-	-	-	-
-	-	-	-	-	-	-
-	-	-	-	-	-	-
-	-	-	-	-	-	-

KENNEC INC.
235 EAST BROADWAY SUITE 311, LONG BEACH, CA 90802

PROJECT CONTACT: JOAQUIN WRIGHT 909.857.2160
PROJECT NUMBER: C004.001.0701.001

KENNEC

THIS DOCUMENT IS THE INTELLECTUAL PROPERTY OF KENNEC INC. EXCEPT TO THE EXTENT NOT PROTECTED BY COPYRIGHT LAW, ANY USE, DISTRIBUTION, SALE OR MODIFICATION MADE TO THIS DOCUMENT WITH OUT WRITTEN AUTHORIZATION BY KENNEC, INC. WILL RENDER THIS DOCUMENT VOID.

CALIFORNIA INTEGRATED WASTE MANAGEMENT BOARD
MARINA DRIVE AT MILE MARKER 0.63
MENDOCINO COUNTY, CALIFORNIA

MARINA DRIVE SLIDE REPAIR
SECTIONS

REGISTERED PROFESSIONAL ENGINEER
GARY MICHAEL LIVERMORE
No. 64142
EXP. 12/31/08
CIVIL
STATE OF CALIFORNIA

D1
DRAWING NO.

J:\C004-Dana Humphrey\001-CIWMB\0701.001-Marina Dr\Dwg\C004.001.0701.001.001.dwg
X-Ref Files: C004.001.0701.001.XTB

REDUCTION SCALE CHECK
SCALE = 1"

Printed: Jun 14, 2007-2:50pm

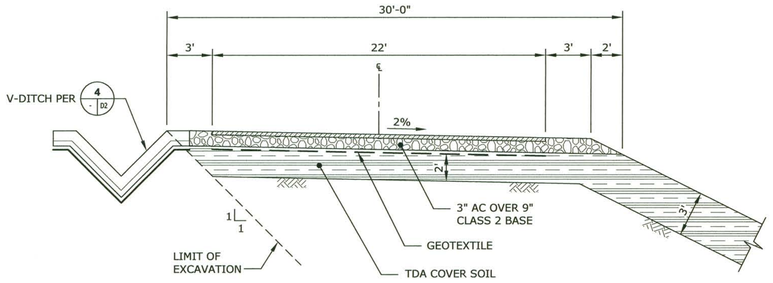

NOTES
- MENDOT SHALL PLACE GEOTEXTILE AND CONSTRUCT 3" AC OVER 9" CLASS 2 BASE

DETAIL 1 - D2
ROAD SECTION

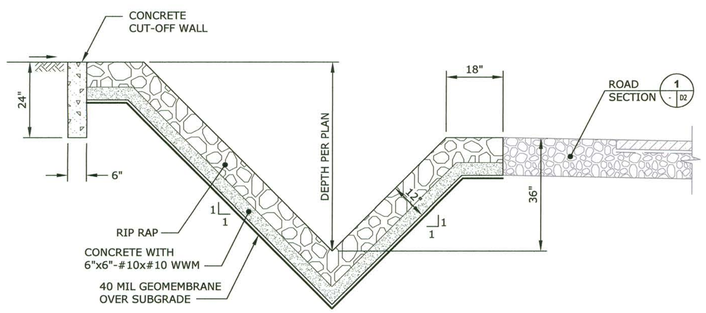

TYPE A

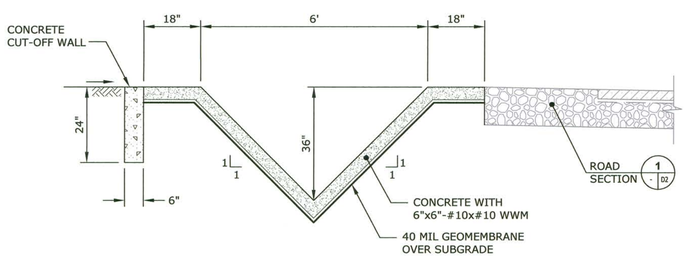

TYPE B

DETAIL 4 - D2
GROUTED RIP RAP V-DITCH

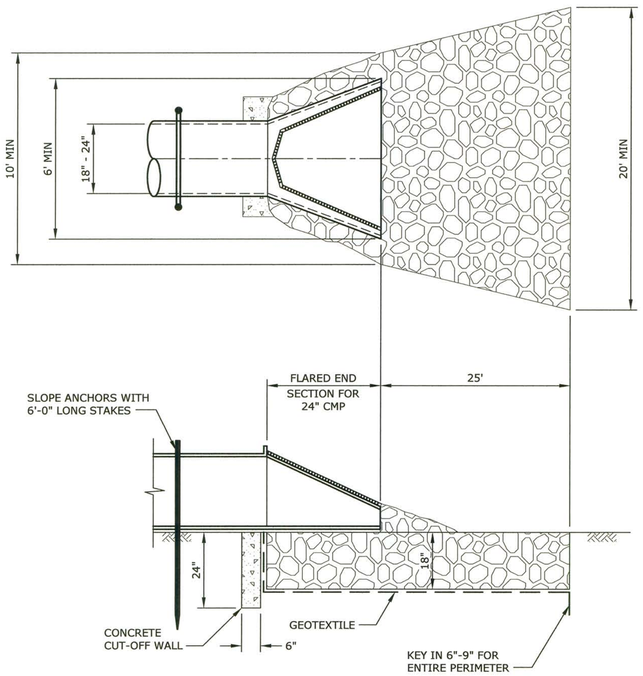

DETAIL 2 - D2
CMP OUTLET AND RIP RAP PAD

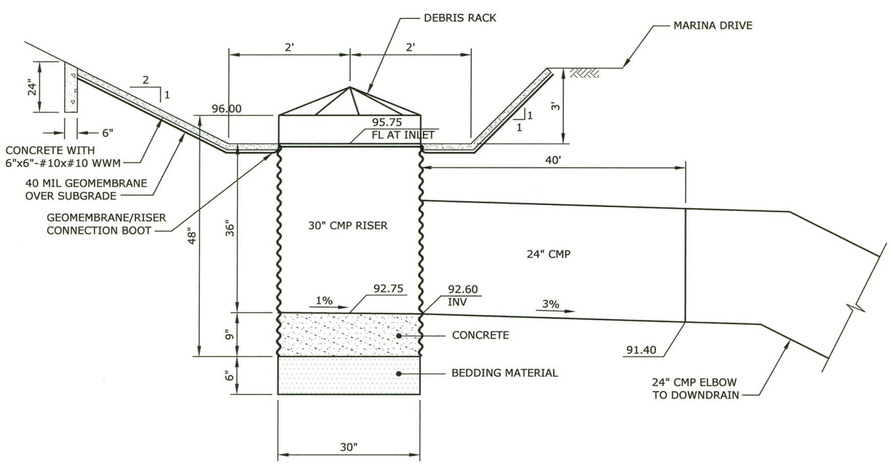

DETAIL 5 - D2
RISER INLET

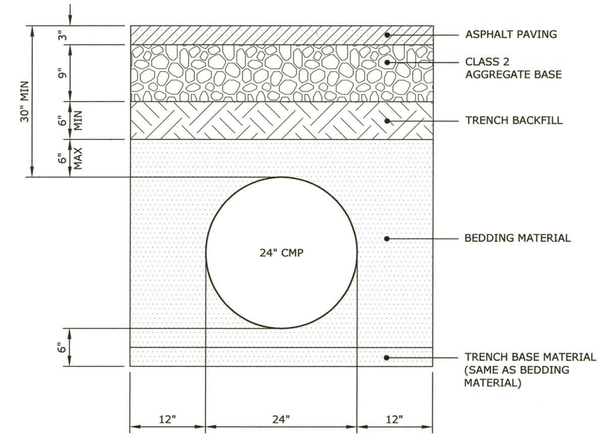

DETAIL 3 - D2
24" CMP TRENCH

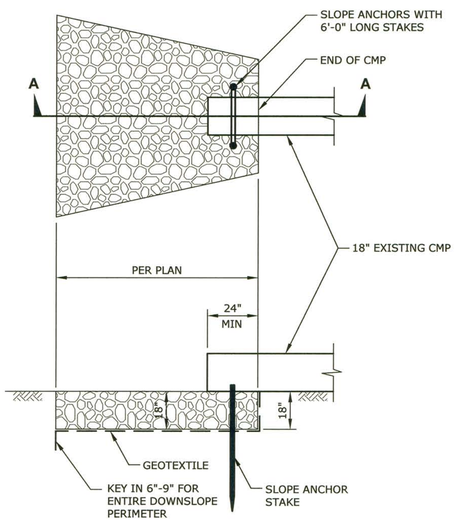

SECTION A

NOTES:
RIP RAP SIZE: D_{50}=8.0"

DETAIL 6 - D2
RIP RAP SLOPE PROTECTION

REV	DATE	REVISION DESCRIPTION	DRAWN BY	DESIGNED BY	CHECKED BY	APPROVED BY
-	6/14/07	DATE OF COMPLETION	JPJ	JI	JAW	GL
-	-	-	-	-	-	-
-	-	-	-	-	-	-
-	-	-	-	-	-	-
-	-	-	-	-	-	-
-	-	-	-	-	-	-

KENNEC INC.
235 EAST BROADWAY SUITE 311, LONG BEACH, CA 90802

PROJECT CONTACT: JOAQUIN WRIGHT 909.657.2160
PROJECT NUMBER: C004.001.0701.001

KENNEC

THIS DOCUMENT IS THE INTELLECTUAL PROPERTY OF KENNEC, INC. EXCEPT TO THE EXTENT NOT PROTECTED BY COPYRIGHT LAW, ANY USE, DISTRIBUTION, SALE OR MODIFICATION MADE TO THIS DOCUMENT WITH OUT WRITTEN AUTHORIZATION BY KENNEC, INC. WILL RENDER THIS DOCUMENT VOID.

CALIFORNIA INTEGRATED WASTE MANAGEMENT BOARD
MARINA DRIVE AT MILE MARKER 0.63
MENDOCINO COUNTY, CALIFORNIA

MARINA DRIVE SLIDE REPAIR
DETAILS

REGISTERED PROFESSIONAL ENGINEER
GARY MICHAEL LIVESMORE
No. 64142
EXP. 12/31/08
CIVIL
STATE OF CALIFORNIA

D2
DRAWING NO.

J:\C004-Dana Humphrey\001-CIWMB\0701.001-Marina Dr\Dwg\C004.001.0701.001.002.dwg
X-Ref Files: C004.001.0701.001.XTB

REDUCTION SCALE CHECK
SCALE = 1"

Printed: Jun 14, 2007-3:18pm